VOWIFI ROAMING
SIMPLE COMPLEXITY

The architecture required to support not only WiFi roaming, but also to enable transparent transition between WiFi and 2G/3G and LTE networks during a voice session is quite complex.

In this article we therefore need to delve a little deeper into the technology behind Voice over WiFi (VoWiFi) and how the extension of the service to the roaming environment introduces new challenges for operators and opportunities for intermediaries, such as IPX providers, to make the overall ecosystem work smoothly.

THE ECOSYSTEM

The VoWiFi roaming value chain is composed of 4 key components, each with its own set of opportunities, challenges and stakeholders:

1. Device
2. Connectivity
3. Service enablement
4. Customer

The device is the mobile device (SIM or non-SIM smartphone or tablet) that has both WiFi capabilities and a VoWiFi client that could be either natively integrated into the main dialer or an additional App. Without that capability, the VoWiFi service cannot exist.

Prior to initiating a call, the connectivity must be assured by two different actors, the visited WiFi Network Provider through which the mobile device is connected (either a mobile operator's WiFi network or a WiFi hot spot) and the backbone internet provider, which ensures that the communication is transported back to the home network for processing and routing.

Next in the chain is the service enablement, which encompasses the authentication of the user as being able to make VoWiFi calls, the analysis of the call or session data to enable routing and call termination and, finally, reporting and billing.

The last (and perhaps also the first) link of the chain is the user, who could either be the consumer or the enterprise customer, who uses and pays for the service.

While it is possible for a home service provider to establish all the arrangements with distant WiFi network operators via multiple bilateral arrangements, the complexity of commercial arrangements and contracts, location information, billing and settlement and quality optimization means that a hub and clearing house between the various players becomes highly preferable.

By virtue of their role as the "glue" in international communications, wholesalers and IPX providers therefore have a natural role to play in providing international connectivity and transport. However, some can also play the role of hub and clearing house and become central to the whole process.

THE TECHNICALITIES

While the hub and clearing house is a clear requirement for the initial WiFi connection and ongoing usage, VoWiFi has been designed to work directly with the home service providers' network, and some mobile operators will choose to connect directly, at least for some of their major destinations.

Nevertheless, even if a direct relationship is developed between the home and the visited network providers for WiFi roaming, normal roaming arrangements with the distant visited service provider, for LTE and 3G services, will be operating in parallel. It will almost certainly involve the use of an IPX to enable and support those roaming capabilities.

But let's get down to basics and review what a directly connected VoWiFi roaming network architecture and call flow entails.

VoWiFi Roaming value chain

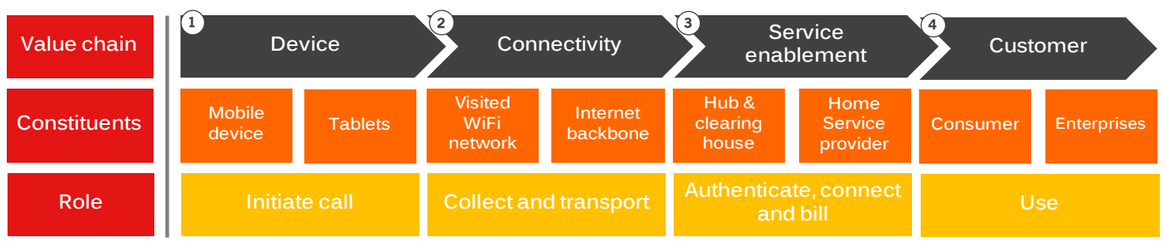

Source: HOT TELECOM

Network architecture and call flow

1. **Creation of event**

   When roaming, customers can connect to either the mobile network (LTE, 2G and 3G) or a WiFi network. When connecting to WiFi, there are two possible scenarios: connecting to what is called a trusted WiFi network (if owned and managed by the mobile operator that the user is subscribed to) or an untrusted network (if owned and managed by a WiFi hot spot provider).

   In the case of WiFi roaming, most of the WiFi networks are considered to be untrusted and will be treated as such, unless the visited WiFi network is owned by a mobile operator which is in the same mobile group as the home network operator.

   From an architecture point of view, when a call is initiated over a trusted WiFi network, a SaMOG tunnel is used to reach the Trusted Wireless Access Gateway (TWAG) within the Evolved Packet Core (EPC) of the home service provider. From there on, the 3GPP S2a interface is used to integrate the EPC with the Packet Data Network Gateway (PGW) and then onward to the IMS core.

   When the call is initiated from an untrusted WiFi network, the device establishes an IPSec tunnel with the Evolved Packet Data Gateway (ePDG) in the home network, which then uses the S2b interface for integration with the PGW and the IMS core.

2. **Authentication**

   Once the connection is initiated through the appropriate tunnel, the device will then communicate, using Diameter signaling, with the Policy and Charging Rule Function (PCRF) and the Home Subscriber Server (HSS) in to home network to confirm policy and approval for making VoWiFi calls.

3. **Call routing**

   With the tunnel and authentication in place, the device is now communicating directly with the core IMS network of the home service provider. Voice calling can now be handled by that network (with voice SIP signaling) and the media can be routed via the tunnel over the public internet to the home network.

   Calls from the device to the home network itself are directly terminated in that network, while other calls are routed onward to their destination. In the case of a traveler calling a colleague in the visited network, the voice call and media will trombone through the home network back to where it started in the visited network, which could add significant latency to the call.

   This issue and potential solutions (through the use of an IPX provider as a VoWiFi roaming hub) will be discussed in the next article in this series.

4. **Monitoring**

The device is made aware of approved WiFi access points in its vicinity via communication with the Access Network Detection and Selection Function (ANDSF) server and it is continually monitoring the radio signal power it is receiving. It is also monitoring the strength of the public service wireless options (2G, 3G and/or LTE).

But nothing in this architecture is actually monitoring IP network congestion or comparing the performance of the WiFi network against the cellular network's quality to determine which will provide the best quality of experience. The only characteristic which is monitored is the strength of the signal.

Nonetheless, in real life, it is very plausible that even if a network provides a strong signal, it could be congested or of low quality. While this is a complex issue to solve, monitoring of the voice session itself can give good information about the performance of the underlying infrastructure, and as we will see in the next article, is a function that an IPX provider could perform to optimize quality of experience.

5. **Handover**

As the customer moves around, or as the quality of the network it is connected to varies, depending on the policy established by the home service provider, the device will connect to alternative WiFi access points and maintain the voice call during the transition.

If no suitable available WiFi points are present, the device can connect via the public network (LTE or 3G or 2G with some incremental network capabilities) in its vicinity. Furthermore, depending on the roaming plan offered to the end user, different billing arrangements will be triggered by the handover between WiFi and cellular and vice versa.

6. **Clearing, billing and settlement**

As mentioned above, during a call via a WiFi access point, the billing of the end user will take place according to the tariff set for VoWiFi calls by the home network. Although termination charges may be required for onward routing of the call from the home network, there are no voice related charges payable to the visited network. Data usage on the WiFi network will be settled (probably via the Hub).

However, when the call migrates to a 2G/3G or LTE connection, the operators involved will settle for that "new" call using their agreed roaming rates and the end user may or may not see an incremental charge on their bill, depending on the roaming package they have chosen.

VoWiFi roaming network architecture

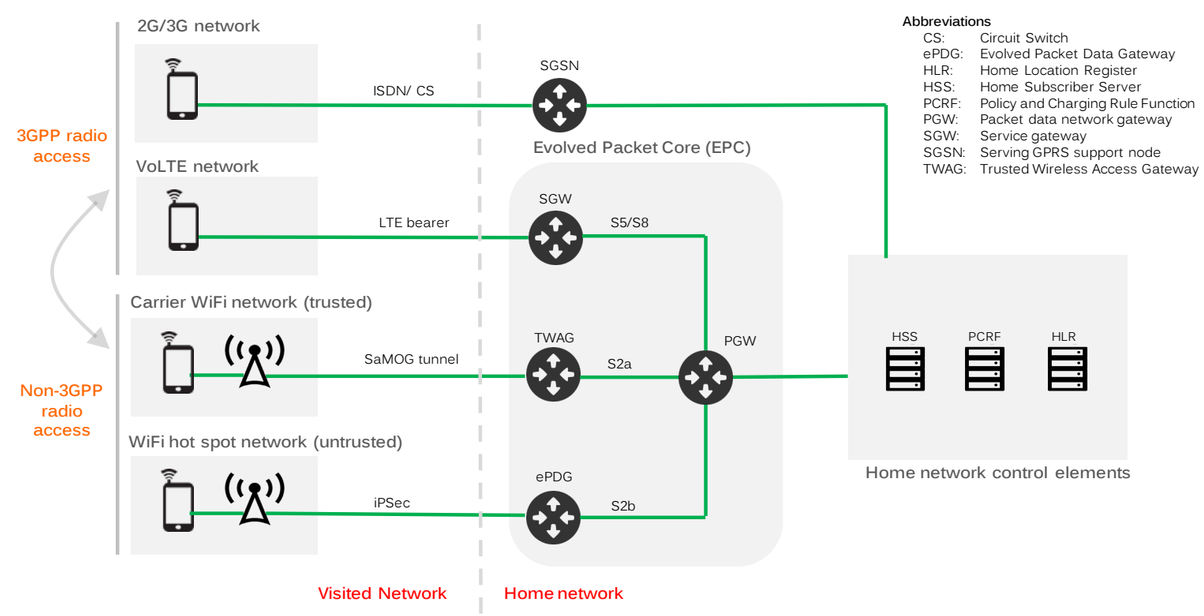

THE CHALLENGES

The implementation of VoWiFi roaming does not come without its challenges, as the complexity is amplified by the many potential players now part of the solution, and as quality of service is increasingly on customers' mind. Some of the challenges that mobile operators need to tackle, if they want to support VoWiFi, while optimizing their customers' quality of experience include:

Quality

- Loss of quality of service control as the voice is carried over the public internet via many possible access points
- Back and forth of calls to the visited network and countries surrounding it, with incremental latency and associated issues
- Difficulty defining the optimal WiFi point to access, based on quality, congestion and availability

Security and Accounting

- Intricacy of managing selection, authentication and connection to appropriate WiFi access points
- Challenges supporting emergency services and locating the caller in case of crisis
- Complexity of meeting lawful intercept requirements
- Ensuring the security of customers' personal information

Access and Hand-over

- Managing complexity of hand-off between WiFi and cellular network in a roaming environment
- Managing accounting and settlement for WiFi connection charges
- Managing settlement of voice calls when a call transitions to a 2G/3G or LTE connection

Now that the scene is set, and the required basic architecture is clear, the final article of this series will investigate options for resolving some of these issues.

With continued technological advancement in real-time monitoring and control, the use of intelligent applications can enable new solutions to help tackle these challenges and, as we will discuss, IPX providers have a central role to play in this equation.

ABOUT THE AUTHORS

Isabelle Paradis
President, HOT TELECOM

Isabelle has worked for 22 years in the telecoms industry. Her personal expertise ranges from Int'l Wholesale through to Business Strategy, and Marketing, along with extensive research and global consulting experience.

She has written numerous articles and spoken at many conferences on the challenges of international telecoms evolution in an all-IP world, a subject close to her heart.

Steve Heap
CTO, HOT TELECOM

Steve has a lifetime of experience in designing, engineering and operating networks, both domestic and international. With leadership experience in small technology start-ups through to global service providers, he has deep experience in a wide range of products, technologies and geographies.

He has the rare skill of being able to explain complex technical issues in easily understood concepts and uses that extensively in his consulting work with HOT TELECOM.

ABOUT HOT TELECOM

HOT TELECOM is one of the most innovative and creative research and consulting companies, which has been providing International operators and carriers with specialized intelligence and advice for the past 13 years.

We understand the challenges faced by international carriers better than anyone, and have therefore developed a number of research and advisory tools and expertise to mirror these needs, and provide the support any wholesaler requires to survive and thrive in the current environment.

To find out more about what we can do for you and how we can make the difference in your success, contact us and it will be our pleasure to provide you with tailored, real-life solutions that will meet your needs, challenges and objectives.

For more information, please visit www.hottelecom.com

ABOUT CATALEYA

Cataleya is a leader in IP networking innovation, with a strong track record in developing and deploying next generation carrier grade session border controllers (SBCs), pushing the envelope in an all IP paradigm.

We develop and deploy intelligent networking technologies for network operators, application service and 4G and LTE based MNOs. We believe that networking technology needs to be simpler, more intuitive and ready to enable an all-IP world.

When a customer chooses Cataleya's technology they gain greater control over their IP network with the operational intelligence to deliver new levels of quality of service and experience.

For more information, please visit www.cataleya.com